HITACHI

Super EX
EX1100

- Rated Engine HP (gross)..... 448 kW (600 HP)
- Operating Weight ..... Loading Shovel: 105 000 kg (231 500 lb)
  Backhoe: EX1100 103 000 kg (227 100 lb)
  EX1100BE 104 000 kg (229 300 lb)
- Loading Shovel Bucket..... PCSA Heaped: 5.7 — 6.3 m^3 (7.5 — 8.2 yd^3)
- Backhoe Bucket..... PCSA Heaped: 2.84 — 6.00 m^3 (3.71 — 7.84 yd^3)
  CECE Heaped: 2.5 — 5.2 m^3

Specifications

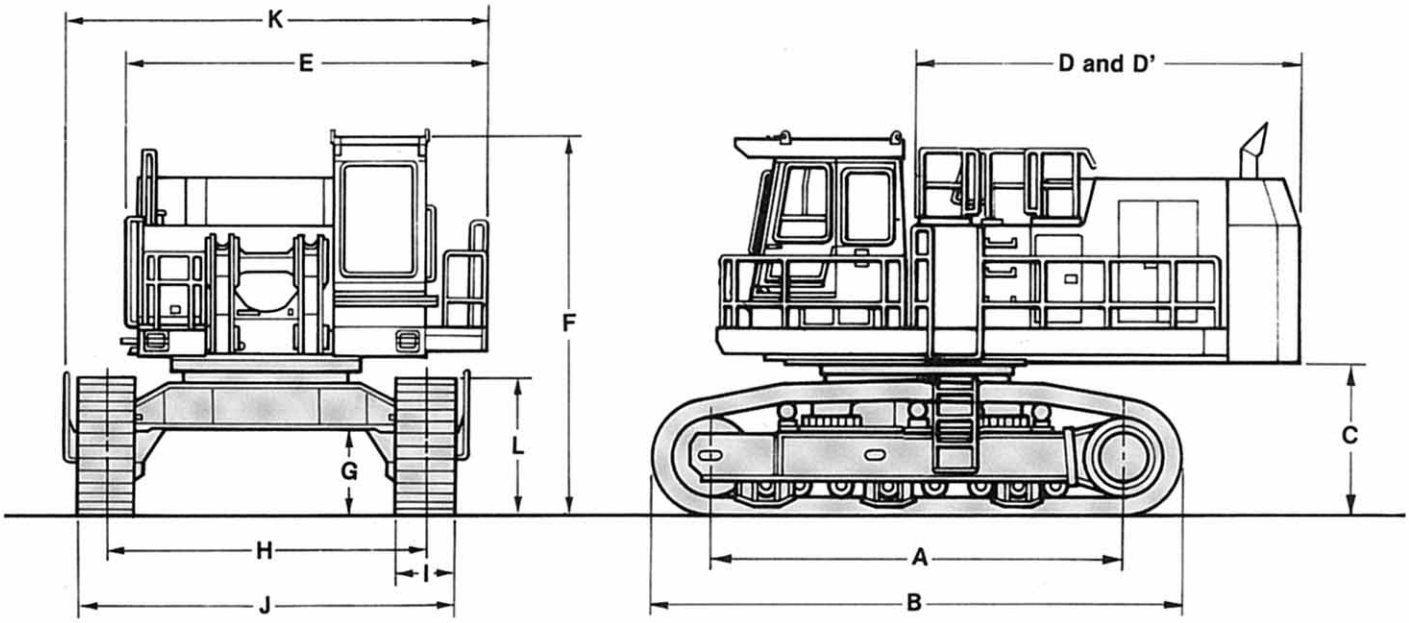

A	Distance between tumblers		5 000 mm (16′5″)	
B	Undercarriage length		6 410 mm (21″0″)	
C	Counterweight clearance		1 850 mm (6″1″)	
D	Rear-end swing radius		4 740 mm (15″7″)	
D'	Rear-end length		4 640 mm (15″3″)	
E	Overall width of upperstructure	Loading shovel	4 450 mm (14″7″)	
		Backhoe	4 640 mm (15″3″)	
F	Overall height of cab (with headguard)	Loading shovel	5 410 mm (17′9″)	
		Backhoe	4 510 mm (14′10″)	
G	Min. ground clearance		990 mm (3′3″)	
H	Track gauge		3 900 mm (12′10″)	
I	Track shoe width		710 mm (28″)	900 mm (35″)
J	Undercarriage width		4 610 mm (15′1″)	4 800 mm (15′9″)
K	Overall width	Loading shovel	5 130 mm (16′10″)	
		Backhoe	5 320 mm (17′5″)	
L	Track height		1 570 mm (5′2″)	

TECHNICAL DATA

ENGINE

Model ..... Cummins QSK19-C
Type..... Water-cooled, 4-cycle, 6 cylinder in line, turbo-charged, direct injection chamber-type diesel engine.
Rated flywheel horsepower (DIN 6271, net) ..... 412 kW (**560 PS**) at 1 800 min^{-1} (**rpm**)
Rated flywheel horsepower (SAE J1349, net) ..... 410 kW (**550 HP**) at 1 800 min^{-1} (**rpm**)
Maximum flywheel horse power (SAE J1349, gross) ..... 447 kW (**600 HP**) at 2 100 min^{-1} (**rpm**)
447 kW (**600 HP**) at 1 800 min^{-1} (**rpm**)
Maximum torque..... 2 644 N·m (**270 kgf·m, 1 950 lbf·ft**) at 1 400 min^{-1} (**rpm**)
Piston displacement ..... 18.9 L (**1 150 in^3**)
Bore and stroke ..... 159 mm × 159 mm (**6.3″ × 6.3″**)
Starting system ..... 24 V electric motor
Batteries ..... 2 × 12 V, 2 × 170 AH

HYDRAULIC SYSTEM

Hitach's ETS (Electronic Total control System) can achieve maximum job efficiency and reducing fuel consumption/noise.

- E-P Control (Computer-aided Engine-Pump Control system) Main pumps regulated by electronic engine-speed sensing control system. Optimum operation mode selectable among 3 power modes depending on type of job.
- OHS (Optimum Hydraulic System) assures fully independent and combined operations.
- FPS (Fuel-saving Pump System)
- RMS (Relief-oil Minimizing System)
- Auto-idling system
- Quick-auto-idling system
- High-pressure 2-speed travel system for high traction force and travel speed.
- Forced-cooling pump drive system
- TIG (Tungsten Inert Gas) welding pipings.

Main pumps..... 3 variable displacement, swash plate type axial piston pumps
Main. oil flow..... 3 × 490 L/min. (**3 × 129.5 US gpm, 3 × 107.8 Imp gpm**)
Pilot pump ..... Gear pump
Max. oil flow..... 62.0 L/min. (**16.4 US gpm, 13.7 Imp gpm**)

Relief Valve Settings

Boom/arm/bucket circuit ..... 29.4 MPa (**300 kgf/cm^2, 4 270 psi**)
Swing circuit ..... 29.4 MPa (**300 kgf/cm^2, 4 270 psi**)
Travel circuit..... 31.4 MPa (**320 kgf/cm^2, 4 550 psi**)
Pilot circuit ..... 5.2 MPa (**53 kgf/cm^2, 650 psi**)

Hydraulic Cylinders

High-strength piston rods and tubes adopted. Cylinder cushion mechanisms are provided for boom, arm, bucket and dump cylinders.
Bucket cylinder of loading shovel is provided with protector.

Dimensions

Loading shovel

	Qty.	Bore	Rod diameter
Boom	2	230 mm (**9.1″**)	160 mm (**6.3″**)
Arm	1	215 mm (**8.5″**)	150 mm (**5.9″**)
Bucket	2	200 mm (**7.9″**)	150 mm (**5.9″**)
Dump	2	140 mm (**5.5″**)	85 mm (**3.3″**)
Level	1	230 mm (**9.1″**)	160 mm (**6.3″**)

Backhoe

	Qty.	Bore	Rod diameter
Boom	2	230 mm (**9.1″**)	160 mm (**6.3″**)
Arm	1	260 mm (**10.2″**)	180 mm (**7.1″**)
Bucket	1	230 mm (**9.1″**)	160 mm (**6.3″**)

Hydraulic Filters

All hydraulic circuits have high-quality hydraulic filters for protection against oil contamination and longer life of hydraulic components.

	Qty.	
Full flow filter	3	10 μm
Drain filter	1	10 μm
(For all planger type pumps & motors)		
Suction filter	2	177 μm
Pilot filter	1	10 μm

These filters are centralized in arrangement for facilitating maintenance.

CONTROLS

2 Implement Levers
Remote-controlled joystick hydraulic servo system. Right lever is for boom and bucket control, left lever for swing and arm control. For loading shovel, 2 pedals provided for opening/closing the bottom dump bucket.

2 Travel Levers with Pedals
Remote-controlled hydraulic servo system. Independent drive at each track allows counterrotation of tracks.

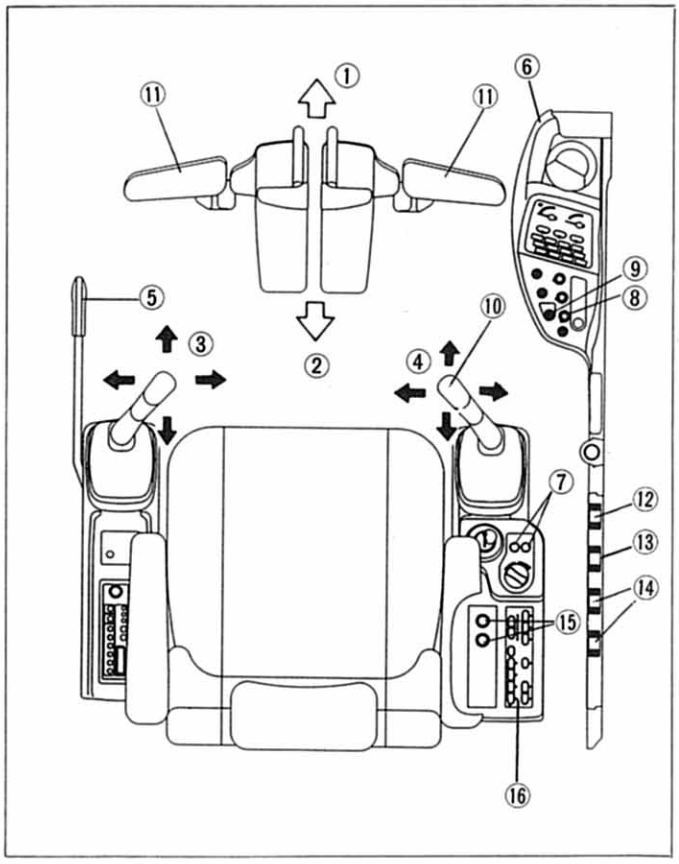

① Travel forward
② Travel reverse
③ Swing/Arm control lever
④ Boom/Bucket control lever
⑤ Control neutralization lever
⑥ Monitoring system
⑦ Mode selection switch
⑧ High/low travel speed selection switch
⑨ Auto idling switch
⑩ Quick-auto-idling switch
⑪ Foot rests for Backhoe Bucket open/close pedals for Loader
⑫ Travel motion alarm switch (Option)
⑬ Heavy lifting switch for Backhoe (Option)
⑭ Engine diagnostic switch
⑮ Auto-lubrication switch (Option)
⑯ Air conditioner switch

UPPERSTRUCTURE

Revolving Frame
A deep, full-reinforced box section. Heavy-gauge steel plates used for ruggedness.

Deck Machinery
Maintenance accessibility is the major feature in the layout of deck machinery. Side-walk provide easy access to engines, hydraulic and electrical components.

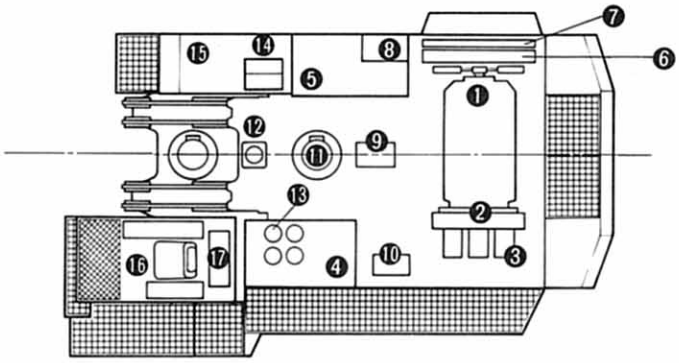

❶ Engine
❷ Pump drive unit
❸ Hydraulic pump × 3
❹ Hydraulic tank
❺ Fuel tank
❻ Engine radiator
❼ Oil cooler
❽ Fuel cooler
❾ Main control valve
❿ Swing control valve
⓫ Swing device × 2
⓬ Center joint
⓭ Filters
⓮ Batteries
⓯ Tool box
⓰ Operator cab
⓱ Air-conditioning unit

Swing Mechanism
2 high-torque, axial piston motors with planetary reduction gear bathed in oil. Swing circle is single-row, shear-type ball bearing with induction-hardened internal gear. Internal gear and pinion gear immersed in lubricant. Swing parking brake is spring-set, hydraulic-released disc type.
Swing speed ..... 5.8 min^{-1} **(rpm)**

Operator's Cab
Steel construction with integrated, falling-object-protective structure meeting SAE FOPS. Independent, pressurized, 1 100 mm (**3′7″**) wide, 1 900 mm (**6′3″**) high, roomy 3.15 m^3 (**4.1 yd^3**) cab with tinted glass windows features all-round visibility. Spring-suspension-type, fully-adjustable reclining seat with armrests; movable with or without front and swing control levers by slide. Instrument and control panel is built in cab wall is in easy range of the operator.
Powerful fresh air ventilation type air conditioner. Cool-and-hot box and rotatable blower louvers also serve as defrosters. Thus, rapid air-conditioning can be achieved for operator comfort.
Rubber-mounting and sound-proofing structure to reduce noise level and vibration.
Noise level ..... 78 dB (A) in the cab; on max. engine speed under no-load condition

TECHNICAL DATA

UNDERCARRIAGE

Tracks
Tractor-type undercarriage. Bolt linkage for side frame assures durability. Heavy-duty track frame of all-welded, stress-relieved structure. Top-grade materials used for toughness. Lifetime-lubricated induction-hardened track rollers, idlers and sprockets with floating seals. Track shoes of cast steel with double grousers. Durable strut-reinforced track links with track guards. Hydraulic (grease) track adjusters with shock absorbing recoil springs.

Tractor-type Undercarriage
Double grouser track shoes of induction-hardened cast steel
Shoe width ..... 710 mm (**28″**) Standard
900 mm (**35″**) optional for Backhoe attachment only

Numbers of rollers and shoes (each side)
Upper rollers 3
Lower rollers 8
Track shoes 52

Traction Device
Each track driven by a high-torque, axial piston motor through planetary reduction gears, allowing counter-rotation of the tracks. Easily replaceable sprockets. Parking brake of spring-set, hydraulic-released disc type.
Travel speeds ..... Low: 0 to 2.5 km/h (**1.6 mph**)
High: 0 to 3.6 km/h (**2.2 mph**)
Maximum traction force ..... 617.8 kN
(**63 000 kgf, 138 900 lbf**)
Gradeability ..... 35° (**70%**) max.

WEIGHTS AND GROUND PRESSURE

Loading Shovel
Equipped with 6.3 m³ (**8.2 yd³; PCSA heaped**) bottom dump bucket

Shoe type	Shoe width	Operating weight	Ground pressure
Double grousers	710 mm (**28″**)	105 000 kg (**231 500 lb**)	132 kPa (**1.35 kgf/cm², 19.2 psi**)

Backhoe
EX1100: Equipped with 9.1 m (**29′10″**) boom, 3.4 m (**11′2″**) arm, and 4.6 m³ (**6.0 yd³; PCSA heaped**) bucket

Shoe type	Shoe width	Operating weight	Ground pressure
Double grousers	710 mm (**28″**)	103 000 kg (**227 100 lb**)	129 kPa (**1.32 kgf/cm², 18.8 psi**)
	900 mm (**35″**)	104 400 kg (**230 200 lb**)	103 kPa (**1.05 kgf/cm², 14.9 psi**)

EX1100BE-front: Equipped with7.55 m (**24′9″**) BE-boom, 3.4 m (**11′2″**) BE-arm and 6.0 m³ (**7.8 yd³; PCSA heaped**) bucket

Shoe type	Shoe width	Operating weight	Ground pressure
Double grousers	710 mm (**28″**)	104 000 kg (**229 300 lb**)	130 kPa (**1.33 kgf/cm², 18.9 psi**)
	900 mm (**35″**)	105 400 kg (**232 400 lb**)	104 kPa (**1.06 kgf/cm², 15.1 psi**)

SERVICE REFILL CAPACITIES

	liters	US gal	Imp gal
Fuel tank	1 200	317.0	264.0
Engine coolant	121	32.0	26.6
Engine oil	55	14.5	12.1
Pump drive	13	3.4	2.9
Swing device (each side)	25	6.6	5.5
Travel final device (each side)	43	11.4	9.5
Hydraulic tank	610	161.2	134.2
Hydraulic system	1 350	356.7	297.0

LOADING SHOVEL ATTACHMENTS

Boom and arm are all-welded, low-stress, high-tensile strength steel full-box section design. Efficient, automatic level crowding achieved by one-lever control because parallel link mechanism keeps the bucket digging angle constant, and level cylinder circuit maintains the bucket height constant. (Auto-Leveling Crowd Mechanism)

- Dual-support-type boom/arm/bucket pin linkage
- Double lip pin seals plus O-ring with protector ring at arm top.

WORKING RANGES

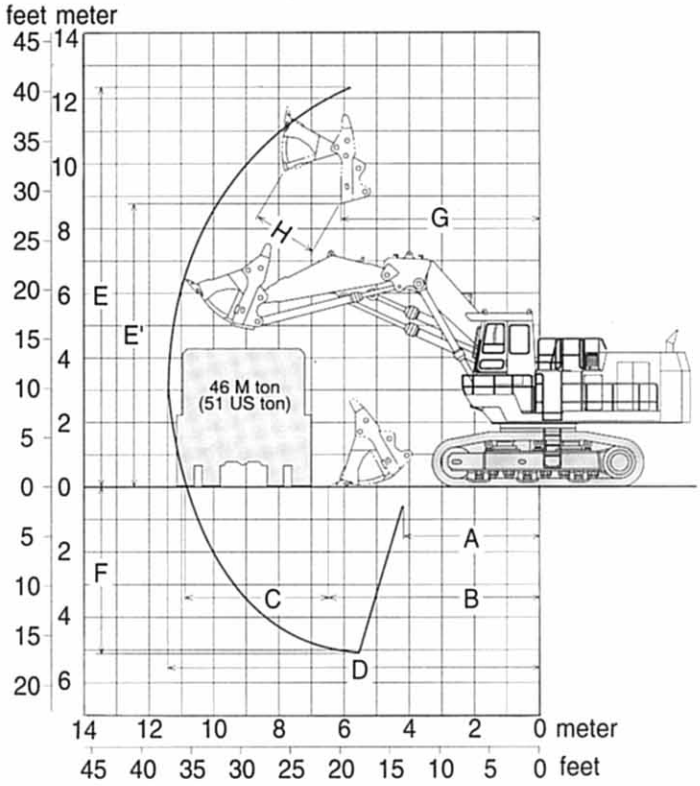

Bottom dump type	EX1100-3
A Min. digging distance	4 240 mm (13′11″)
B Min. level crowding distance	6 600 mm (21′8″)
C Level crowding distance	4 210 mm (13′10″)
D Max. digging reach	11 440 mm (37′6″)
E Max. cutting height	12 350 mm (40′6″)
E' Max. dumping height	8 740 mm (28′8″)
F Max. digging depth	5 230 mm (17′2″)
G Working radius at max. dumping height	6 090 mm (20′0″)
H Max. bucket opening width	1 880 mm (6′2″)
Crowding force	555 kN (56 600 kgf, 124 800 lbf)
Breakout force	553 kN (56 400 kgf, 124 400 lbf)

Digging force (SAE)

Buckets (PCSA heaped)

Capacity	Width	No. of teeth	Weight	Type
5.7 m^3 (7.5 yd^3)	2 510 mm (8′3″)	6	9 660 kg (21 300 lb)	Bottom dump type rock bucket
6.3 m^3 (8.2 yd^3)	2 700 mm (8′10″)	6	9 080 kg (20 020 lb)	Bottom dump type general purpose bucket

TECHNICAL DATA

BACKHOE ATTACHMENTS

Boom and arm are all-welded, low-stress, full-box section design.
Bucket of all-welded high-strength steel structure, side clearance adjust mechanism is provided on the bucket joint brackets.

- Two-points support-type boom cylinder pin linkage.
- Double lip pin seals (in all portions) plus O-ring with protector ring at arm top and link A.
- Helilock bucket teeth.

BE (Bulk Excavation) front

EX1100-3 BE front: The EX1100-3 BE front is designed and manufactured as a production-oriented machine. Its features include a short arm and boom, large-capacity bucket, large-digging force and superb digging/loading capability.

WORKING RANGES

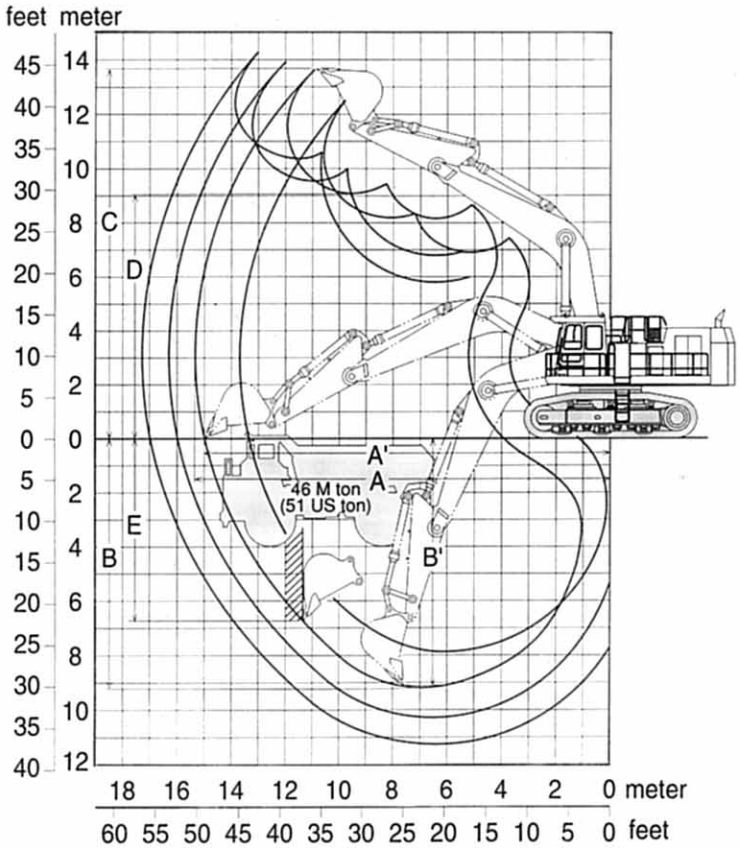

Unit: mm (ft in)

		EX1100-3			EX1100-3 BE-front
Boom length		9.1 m (29′10″)			7.55 m(24′9″)BE-boom
Arm length		3.4 m (11′2″)	4.5 m (14′9″)	5.8 m (19′0″)	3.4 m (11′2″)
A Max. digging reach		15 350 (50′4″)	16 380 (53′9″)	17 360 (56′11″)	13 780 (45′3″)
A' Max. digging reach (on ground)		15 010 (49′3″)	16 070 (52′9″)	17 070 (56′0″)	13 410 (44′0″)
B Max. digging depth		9 320 (30′7″)	10 420 (34′2″)	11 420 (37′6″)	7 930 (26′0″)
B' Max. digging depth (8′ level)		9 190 (30′2″)	10 310 (33′10″)	11 330 (37′2″)	7 800 (25′7″)
C Max. cutting height		13 580 (44′7″)	14 020 (46′0″)	14 390 (47′3″)	12 600 (41′4″)
D Max. dumping height		9 010 (29′7″)	9 430 (30′11″)	10 360 (34′0″)	8 150 (26′9″)
E Max. vertical wall depth		7 670 (24′11″)	8 880 (29′2″)	10 360 (34′0″)	6 270 (20′7″)
Bucket digging force kN (kgf, lbf)	ISO	429 (43 700, 96 400)	429 (43 700, 96 400)	308 (31 400, 69 200)	492 (50 700, 111 800)
	SAE: PCSA	392 (40 000, 88 200)	392 (40 000, 88 200)	275 (28 000, 61 700)	451 (46 000, 101 400)
Arm crowd force kN (kgf, lbf)	ISO	371 (37 800, 83 400)	310 (31 600, 69 700)	270 (27 500, 60 600)	377 (38 000, 83 800)
	SAE: PCSA	363 (37 000, 81 600)	304 (31 000, 68 400)	265 (27 000, 59 500)	363 (37 000, 81 600)

Buckets

Capacity		Width		No. of teeth	Weight	Recommendation			
						EX1100-3			EX1100-3 BE-front
						9.1 m (29′10″) boom			7.55 m (24′9″) BE-boom
PCSA heaped	CECE heaped	Without shroud	With shroud			3.4 m (11′2″) arm	4.5 m (14′9″)arm	5.8 m (19′0″) arm	3.4 m (11′9″) arm
**2.84 m³ (3.71 yd³)	2.5 m³	1 600 mm (5′3″)	1 700 mm (5′7″)	5	2 950 kg (6 500 lb)			●	
3.16 m³ (4.13 yd³)	2.8 m³	1 740 mm (5′9″)	1 840 mm (6′0″)	5	3 100 kg (6 840 lb)			◎	
**3.30 m³ (4.31 yd³)	3.0 m³	1 360 mm (4′6″)	1 460 mm (4′9″)	4	4 000 kg (8 820 lb)		●		
3.76 m³ (4.92 yd³)	3.4 m³	1 560 mm (5′1″)	1 660 mm (5′5″)	5	3 700 kg (8 160 lb)		◎		
**4.00 m³ (5.23 yd³)	3.6 m³	1 580 mm (5′2″)	1 680 mm (5′6″)	5	4 450 kg (9 810 lb)	●			
**4.50 m³ (5.88 yd³)	4.0 m³	1 710 mm (5′7″)	1 810 mm (5′11″)	5	4 650 kg (10 250 lb)	●			
4.60 m³ (6.01 yd³)	4.0 m³	*1 810 mm (5′11″)	*1 990 mm (6′6″)	5	4 140 kg (9 130 lb)	◎			
**5.10 m³ (6.67 yd³)	4.6 m³	1 960 mm (6′5″)	2 060 mm (6′9″)	5	5 700 kg (12 570 lb)				●
6.00 m³ (7.84 yd³)	5.2 m³	2 180 mm (7′2″)	2 280 mm (7′6″)	6	5 470 kg (12 060 lb)				◎

* Width of side cutters
** Rock bucket

◎ Suitable for materials with density of 2 000 kg/m³ (3 370 lb/yd³) or less
● Heavy-duty service

STANDARD EQUIPMENT

Standard equipment may vary by country, so please consult your Hitachi dealer for details.

ENGINE
- S/P mode control
- E mode control
- 75 A alternator
- Dry-type air filter with clean dust cup
- Cartridge-type engine oil filter
- Cartridge-type fuel filter
- Water filter
- Radiator and oil cooler with dust protective net
- Radiator reserve tank
- Fan guard
- Isolation-mounted engine
- Auto-idle system
- Quick-idle system
- Fuel cooler

HYDRAULIC SYSTEM
- E-P control system
- OHS (Optimum Hydraulic System)
- FPS (Fuel-saving Pump System)
- RMS (Relief-oil Minimizing System)
- Forced-lubrication and forced-cooling pump drive system
- Control valve with main relief valve
- Suction filter
- Full-flow filter
- Pilot filter
- Pump drain filter

CAB
- All-weather sound-suppressed steel integrated cab with headguard (meeting SAE FOPS), laminated glass windshield, reinforced/tinted (bronze color) glass front and side and rear windows, parallel-type intermittent wipers, front windshield washer, adjustable reclining seat with adjustable armrests, footrest, air horn, auto-tuning AM-FM radio with digital clock and two speakers, seat belt, cigarette lighter, ashtray, parcel pocket, glove compartment, floor mat, auto-idle switch, sun visor, evacuation hammer, emergency rope (for elevated cab), starting aid switch, air conditioner with defloster, hot and cool box, engine control dial, and pilot control neutralization lever.

MONITOR SYSTEM
- Meters:
  Hourmeter, engine coolant temperature gauge and fuel gauge.
- Warning indicators:
  Warm up complete, S/P (Super Power) mode, E (Economy) mode, auto-idle, hydraulic oil level, air-filter restriction, fuel level, engine stop, engine warning, work light, engine protection, alternator, pump transmission oil pressure, engine oil level, and coolant level.
- Engine diagnostic switch

OVERHEAD MONITOR PANEL
- Quick idle indicator

MISCELLANEOUS
- Standard tool kit
- ISO-meeted stairs and handrails
- Wide side walk (Left side)
- 12 V power terminal board
- Slip resistance tapes
- Elevated Cab (for Loading Shovel)

LIGHTS
- 4 working lights, 2 cab lights

UPPERSTRUCTURE
- Undercover
- 165 000 kg (363 800 lb) counterweight
- Pneumatic grease gun with hose reel
- Centralized lubrication system
- Control valves with main relief valves and port relief valves
- Slow return orifices and make up valves for cylinder circuits

UNDERCARRIAGE
- Spring-set/hydraulic-released disc type parking brake
- Hydraulic (grease) track adjuster with shock absorbing recoils spring
- Travel motor cover
- Track and idler guards

OPTIONAL EQUIPMENT

Optional equipment may vary by country, so please consult your Hitachi dealer for details.

- Auto-lubrication system (Lincoln) for front-attachment
- Travel motion alarm device
- Havey lifting system (for Backhoe)
- Elevated cab (for Backhoe)
- Full track guard
- High-altitude high-temperature radiator duct

TRANSPORTATION

- Easily assembled owning to local assembling system requiring no welding.
- Overall width of below 3 500 mm (11'6") during transportation.

UPPERSTRUCTURE

Unit: mm (ft in)

Cab support for Loading shovel (Optional equipment for Backhoe)
Weight: 550 kg (1 210 lb)

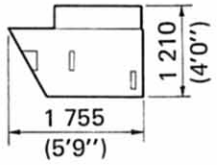

Width: 1 100 (3'7")

Upperstructure
Weight: 31 800 kg (70 120 lb)

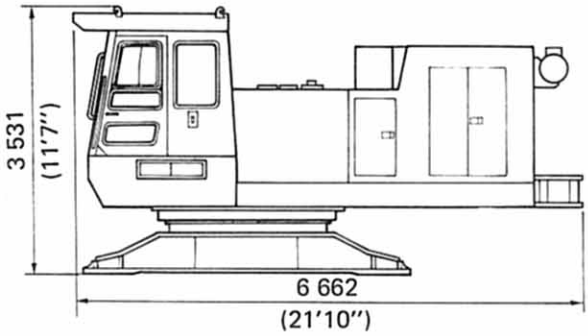

Width: 3 500 (11'6")

Counterweight
Weight: 16 500 kg (36 380 lb)

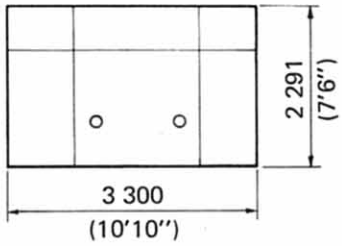

Width: 870 (2'10")

Handrail
Weight: 18 kg (40 lb)

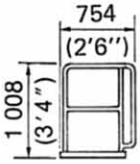

Width: 388 (1'3")

Handrail
Weight: 17 kg (37 lb)

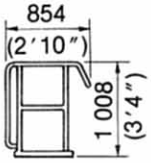

Width: 388 (1'3")

Handrail
Weight: 25 kg (55 lb)

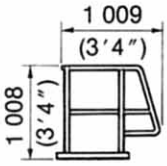

Width: 229 (9")

Handrail
Weight: 27 kg (60 lb)

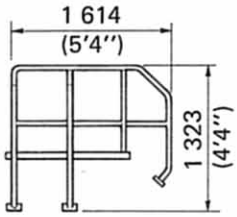

Width: 229 (9")

Handrail
Weight: 52 kg (115 lb)

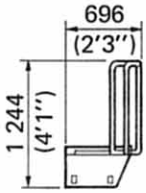

Width: 814 (2'8")

Cat walk
Weight: 21 kg (46 lb)

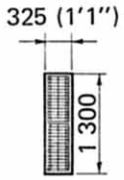

Height: 110 (4")

Cat walk for Loading shovel
Weight: 190 kg (419 lb)

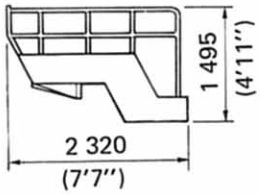

Width: 726 (2'5")

Cat walk
Weight: 195 kg (430 lb)

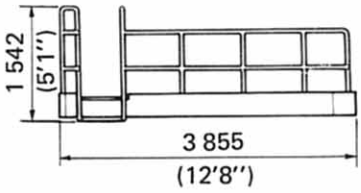

Width: 928 (3'1")

Radiator cover
Weight: 181 kg (399 lb)

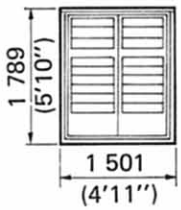

Width: 270 (11")

Cat walk for Backhoe
Weight: 164 kg (362 lb)

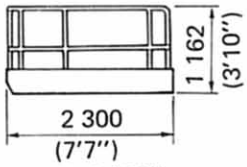

Width: 910 (3'0")

Pipe exhaust
Weight: 12 kg (26 lb)

Unit: mm (ft in)

UNDERCARRIAGE

Side frames

With 710 mm (28") shoes: 14 600 kg (32 190 lb) x 2

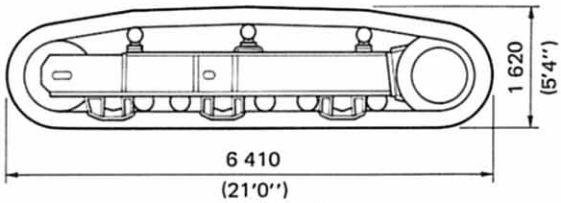

Width: 837 (2'9")

Ladders

Weight: 18 kg (40 lb) x 2

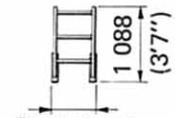

Width: 162 (6.4")

Steps

Weight: 3 kg (7 lb) x 2

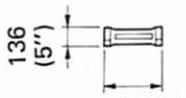

Width: 75 (3")

LOADING SHOVEL ATTACHMENTS

Bucket

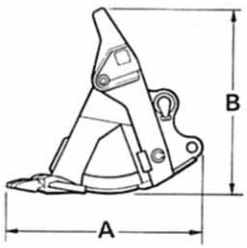

Bucket capacity	A mm (ft in)	B mm (ft in)	Max. width mm (ft in)	Weight kg (lb)
5.7 m³ (7.5 yd³)	2 720 (8'11")	2 580 (8'6")	2 690 (8'10")	9 660 (21 300)
6.3 m³ (8.2 yd³)	2 720 (8'11")	2 780 (9'1")	2 890 (9'6")	9 080 (20 020)

Boom & arm assembly

Weight: 15 200 kg (33 520 lb)

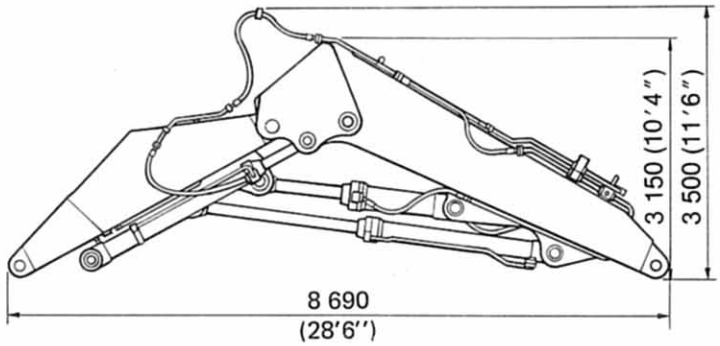

Width: 1 620 (5'4")

Boom cylinders

Weight: 1 170 kg (2 580 lb) x 2

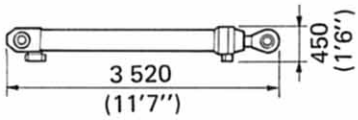

TRANSPORTATION

Unit: mm (ft in)

BACKHOE ATTACHMENTS

Boom

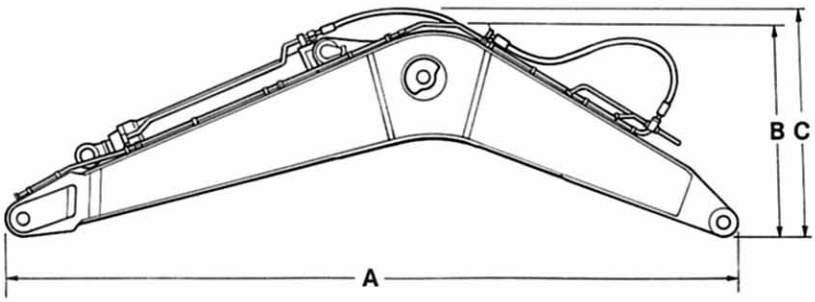

	Boom length	A	B	C	Width	Weight
EX1100-3	9.1 m (29'10")	9 500 mm (31'2")	2 810 mm (9'3")	3 100 mm (10'2")	1 460 mm (4'9")	11 000 kg (24 260 lb)
EX1100-3 BE-front	7.55 m (24'9")	7 960 mm (16'3")	3 150 mm (10'4")	3 400 mm (11'2")	1 460 mm (4'9")	10 900 kg (24 030 lb)

Boom cylinders

Weight: 1 170 kg (2 580 lb) x 2

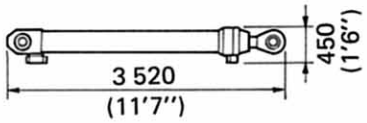

Bucket

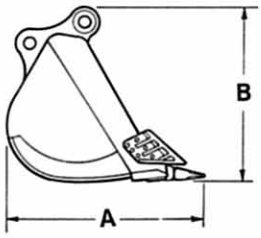

Arm

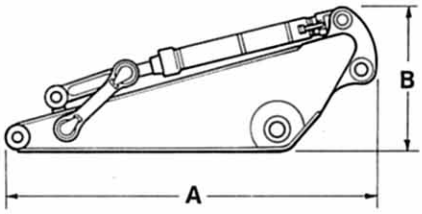

	Arm length	A	B	Width	Weight
EX1100-3	3.4 m (11'2")	4 830 mm (15'10")	1 870 mm (6'2")	960 mm (3'2")	5 730 kg (12 630 lb)
	4.5 m (14'9")	5 975 mm (19'7")	1 700 mm (5'7")	960 mm (3'2")	6 300 kg (13 890 lb)
	5.8 m (19'0")	7 220 mm (23'8")	1 750 mm (5'9")	985 mm (3'3")	5 800 kg (12 790 lb)
EX1100-3 BE-front	3.4 m (11'2")	4 830 mm (15'10")	1 870 mm (6'2")	960 mm (3'2")	5 730 kg (12 630 lb)

Capacity		A	B	Width	Weight
PCSA heaped	CECE heaped				
*2.84 m^3 (3.71 yd^3)	2.5 m^3	1 890 mm (6'2")	2 310 mm (7'7")	1 700 mm (5'7")	2 950 kg (6 500 lb)
3.16 m^3 (4.13 yd^3)	2.8 m^3	1 890 mm (6'2")	2 310 mm (7'7")	1 840 mm (6'0")	3 100 kg (6 840 lb)
*3.30 m^3 (4.31 yd^3)	3.0 m^3	2 300 mm (7'7")	2 480 mm (8'2")	1 460 mm (4'9")	4 000 kg (8 820 lb)
3.76 m^3 (4.92 yd^3)	3.4 m^3	2 280 mm (7'6")	2 480 mm (8'2")	1 660 mm (5'5")	3 700 kg (8 160 lb)
*4.00 m^3 (5.23 yd^3)	3.6 m^3	2 300 mm (7'7")	2 480 mm (8'2")	1 680 mm (5'6")	4 450 kg (9 810 lb)
*4.50 m^3 (5.88 yd^3)	4.0 m^3	2 300 mm (7'7")	2 480 mm (8'2")	1 810 mm (5'11")	4 650 kg (10 250 lb)
4.60 m^3 (6.01 yd^3)	4.0 m^3	2 440 mm (8'0')	2 230 mm (7'4")	1 990 mm (6'6")	4 140 kg (9 130 lb)
*5.10 m^3 (6.67 yd^3)	4.6 m^3	2 210 mm (7'3")	2 600 mm (8'6")	2 060 mm (6'9")	5 700 kg (12 570 lb)
6.00 m^3 (7.84 yd^3)	5.2 m^3	2 160 mm (7'1")	2 560 mm (8'5")	2 280 mm (7'6")	5 470 kg (12 060 lb)

* Rock bucket

Unit: mm (ft in)

OVERALL

BACKHOE

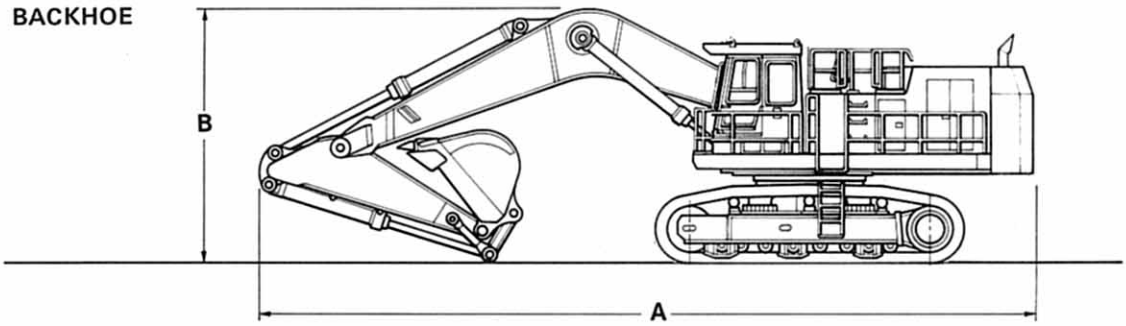

	A	B	Width
EX1100-3	16 040 mm (52′7″)	5 630 mm (18′6″)	5 320 mm (17′5″)
EX1100-3 BE-front	14 500 mm (47′7″)	6 300 mm (20′8″)	5 320 mm (17′5″)

LOADING SHOVEL

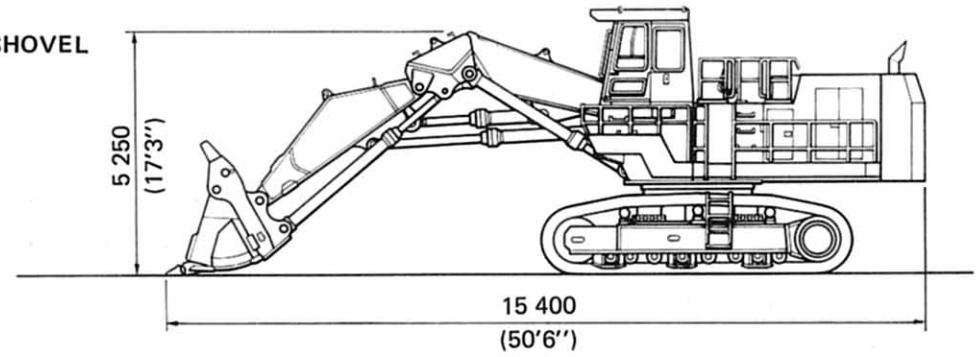

Weight: 105 000 kg (231 500 lb)
Width: 5 130 mm (16′10″)

HITACHI

These specifications are subject to change without notice.

Hitachi Construction Machinery Co., Ltd.

Head Office: Nippon Bldg., 6-2, 2-chome, Ohtemachi,
Chiyoda-ku, Tokyo 100, Japan
Telephone: Tokyo (03) 3245-6390
Facsimile: Tokyo (03) 3246-2609

KS-E199

Printed in Japan **96.8 (SK/SP HT4)**